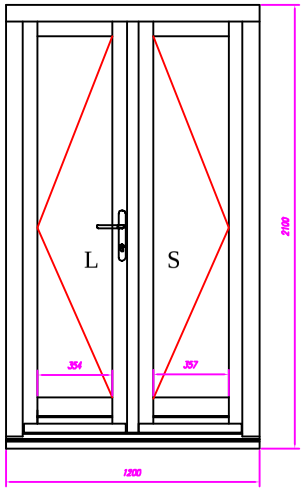
L
S
354
357
2100
1200

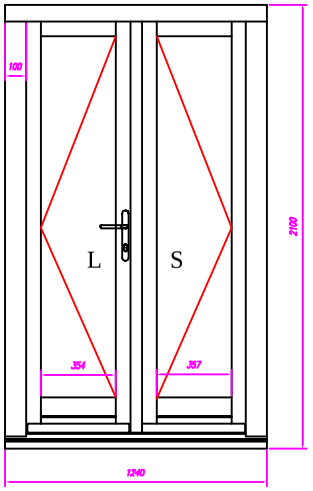
100
L
S
354
357
2100
1240

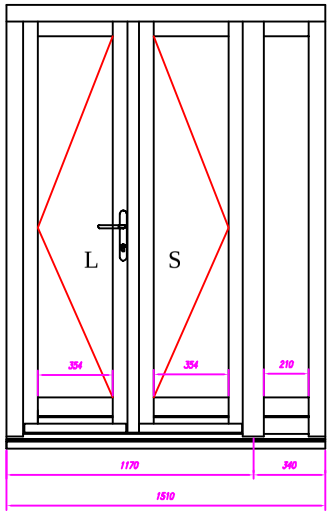
MADE AS ONE UNIT
L
S
354
354
210
1170
340
1510

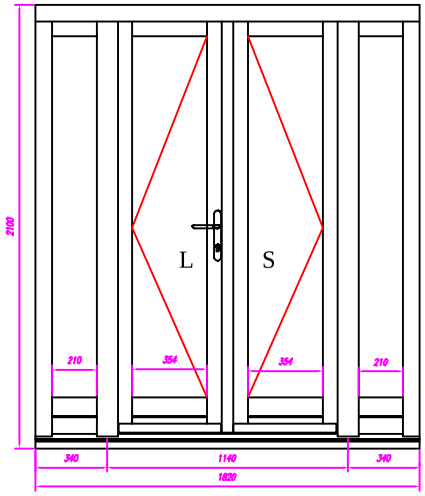
MADE AS ONE UNIT
2100
L
S
210
354
354
210
340
1140
340
1820

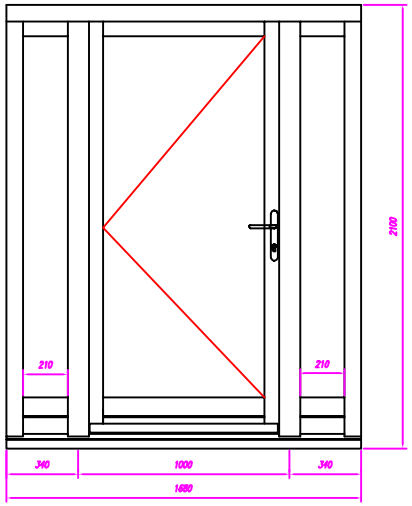
2100
210
210
340
1000
340
1680

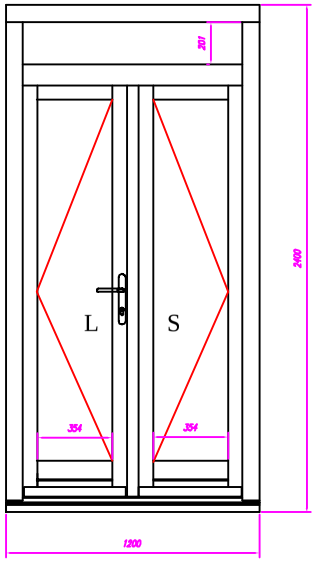
201
L
S
354
354
2400
1200

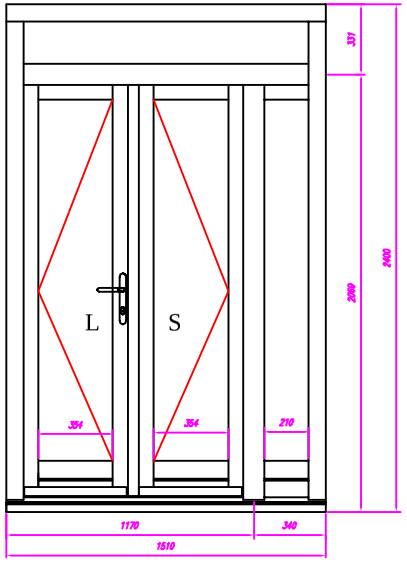
337
L
S
354
354
210
2000
2400
1170
340
1510

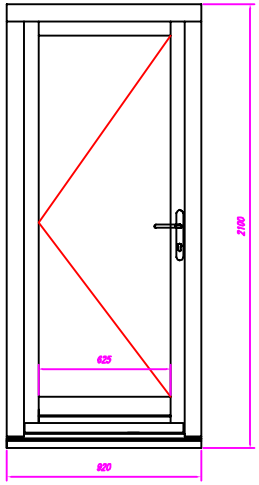
625
2100
820

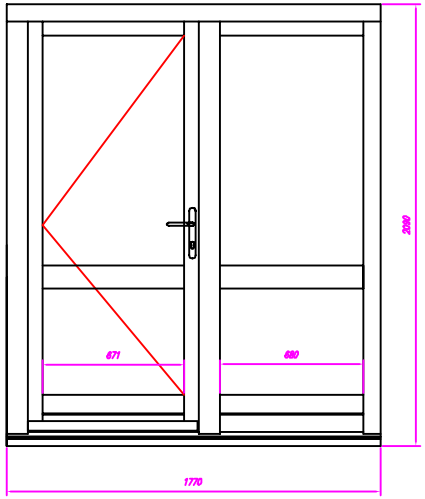
671
680
2000
1770

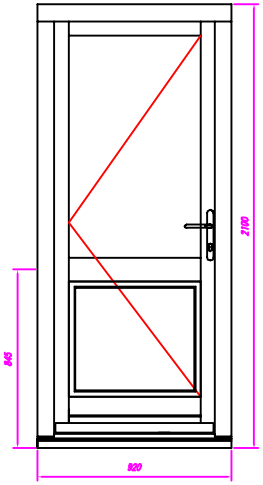
845
2100
820